CNC Procedure 2016_0017

Apr 24th

2016

Procedure for Easy Removal of Amplifier from Control Panel

Applicable for all Amplifiers with Packing attachment

The method to remove the servo amplifier from the cabinet

1. Summary

In case of removing the servo amplifier from the cabinet for maintenance, removing the servo amplifier might be difficult, if the packing of the servo amplifier sticks to the cabinet.
This report shows how to remove the servo amplifier easily in such case.

The method to remove the servo amplifier depends on whether the ground terminal is through hole or non-through hole at lower part of the servo amplifier. (Fig. 1)
Table 1 shows that which model of the servo amplifier has the ground terminal of through hole.

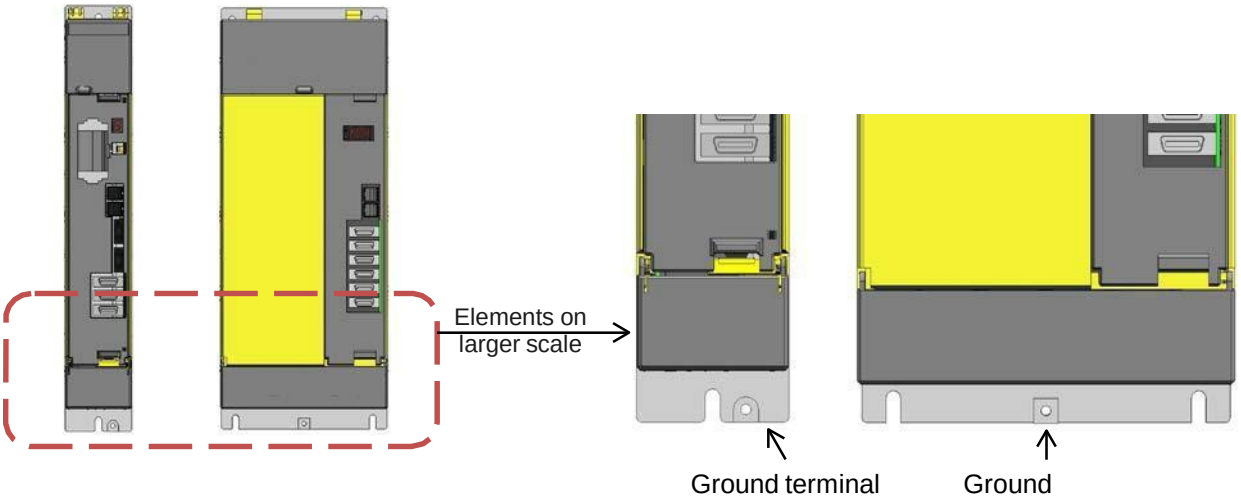

Terminal Fig.1.The position of the ground terminal

Table 1.The model of the servo amplifier which has the ground terminal of through hole

Series	Size	Ground terminal
SERVO AMPLIFIER α series	60mm width, 90mm width	through hole
	150mm width, 300 mm width	non- through hole
SERVO AMPLIFIER αi series	60 mm width, 90 mm width 150 mm width	through hole
	300 mm width	manufactured after Sep. 2014 : through hole (Note1) manufactured before Aug. 2014 : non -through hole
SERVO AMPLIFIER αi -B series	All models	through hole
SERVO AMPLIFIER β series	All models	through hole
SERVO AMPLIFIER βi series	All models	through hole
SERVO AMPLIFIER βi -B series	All models	through hole

Note
1) The manufacture period is not exact. There is period of transition.

2. In case the ground terminal is through hole

In case of the ground terminal is through hole, put the screw which is longer than 20 mm into the ground terminal. The servo amplifier is removed because the screw pushes the cabinet.

Details are explained in the following procedure. (Fig.2)

i. Remove the screws which fix the servo amplifier to the cabinet.
ii. Put the screw into the ground terminal.
iii. Turn the screw clockwise until the screw reaches the cabinet.
iv. Keep turning the screw until the servo amplifier is removed.
In order to prevent fall of the servo amplifier, support the servo amplifier by hand.

The Amplifier Removal Tool which is introduced in the section 3 is available to the model of the servo amplifier which ground terminal is through hole.
The method about the Amplifier Removal Tool is explained in the section 3.

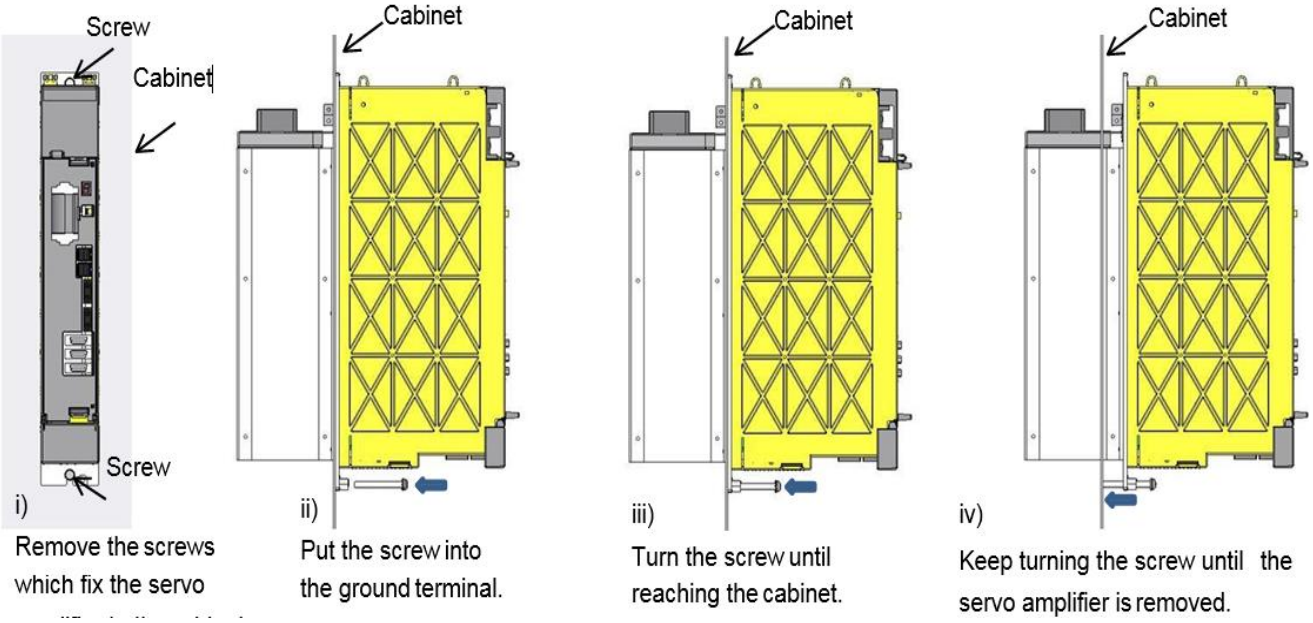

Fig.2.The method to remove the servo amplifier which has the ground terminal of through hole

3. In case the ground terminal is non-through hole

In case of the ground terminal is non-through hole, use the Amplifier Removal Tool.
(Order specification: **A06B-6200-K509**)

This tool consists of the sheet metal, the long Screw, and the short screw. And the cap nut is mounted at the tip of long screw. (Fig.3)

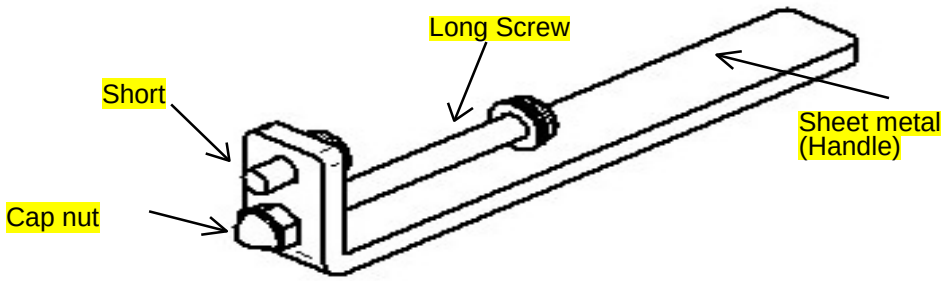

Fig.3.The constitution of Amplifier Removal

Tool The procedure is explained in the following. (Fig.4)

i. Remove the screws which fix the amplifier to the cabinet.
ii. Turn the long screw anti-clockwise until the protrusion of long screw from the sheet metal becomes less than 10 mm.
iii. Fix the Amplifier Removal Tool to the ground terminal.
iv. Turn the long screw clockwise until the cap nut reaches the cabinet.
v. Keep turning the long screw until the servo amplifier is removed.
In order to prevent fall of the servo amplifier, support the servo amplifier by hand.

The size of the attached short screw is M5 and 12mm length. Because the size of ground terminal of 300mm width SERVO AMPLIFIER α series is M6, prepare M6 and 12mm length screw.

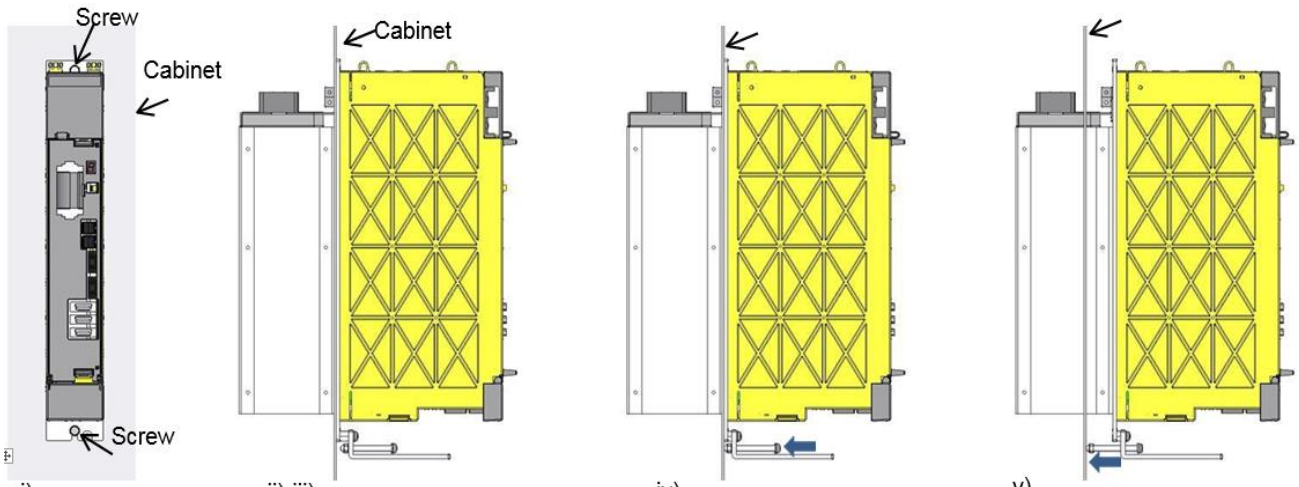

i) Remove the screws which fix the amplifier to the cabinet.

ii)-iii) Fix the tool to the ground terminal. Be careful for the screw not to interfere in the cabinet.

iv) Turn long the screw until reaching the cabinet.

v) Keep turning the screw until the servo amplifier is removed.

Fig.4.The method to remove the servo amplifier which has the ground terminal of non-through hole

4. Change of the packing's form for installing αi-B series SERVO AMPLIFIER for 30i-B

The form of the packing for installing the servo amplifier attached to α*i*-B series SERVO AMPLIFIER for 30*i*-B is changed as follows. The purpose is an improvement of the attachment workability by the simplification of form.

Object

- The packing for 60mm width amplifier
- The packing for 90mm width amplifier
- The packing for 150mm width amplifier

The packing will be changed one by one from April, 2011.

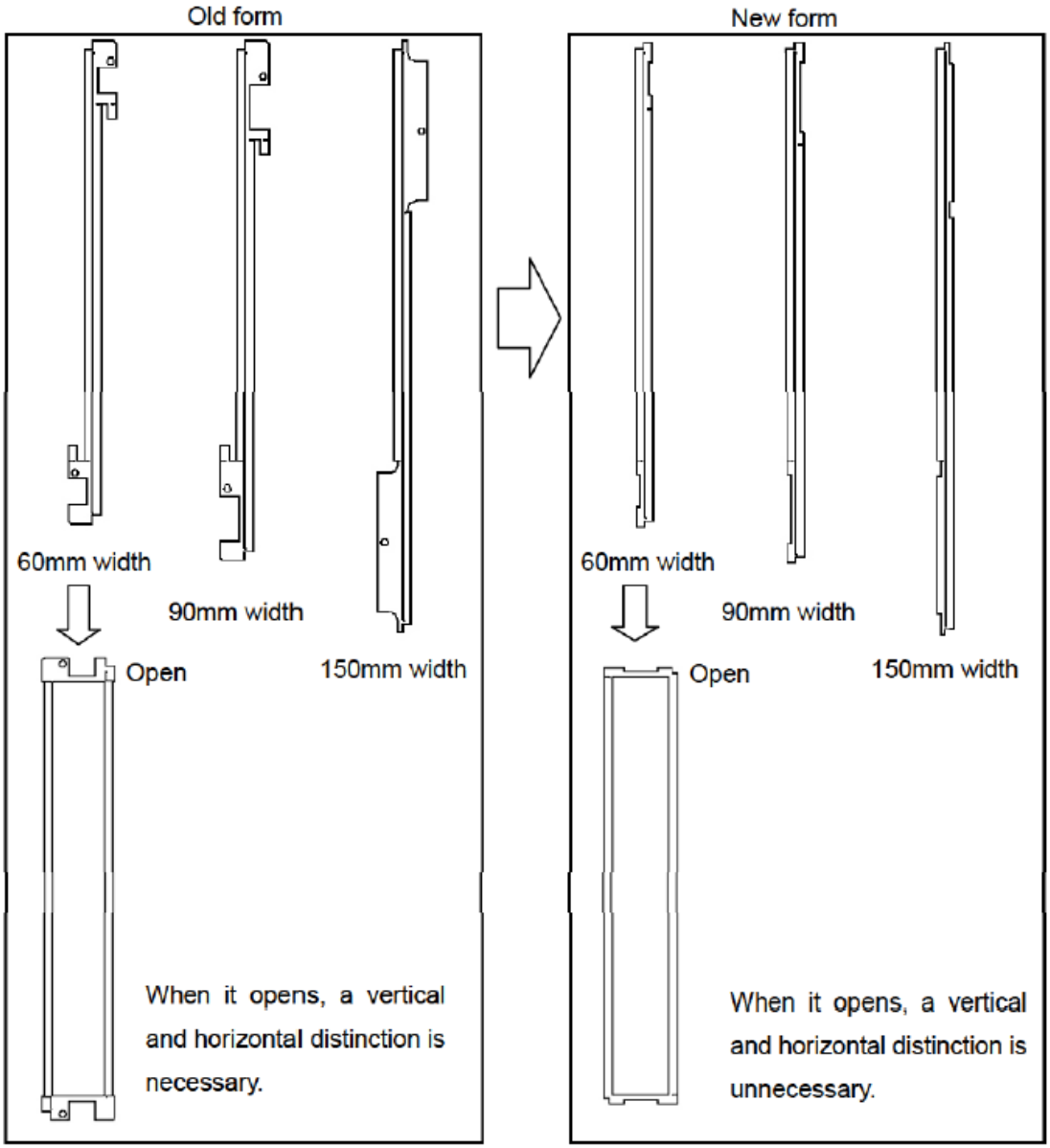

5. How to put the packing to a panel cut-out surface

In order to protect amplifier from oil and dust, please extend the packing attached to amplifier as the following example, and put the packing on the circumference of a panel cut-out hole. Since sealing performance will be spoiled if packing is cut for every sides, please do not cut the packing. There is no vertical and horizontal distinction about new packing.

In addition, in order to obtain attachment accuracy of position please put the packing not on the amplifier but on a cabinet.

Example: How to extend the packing for 60mm width amplifier

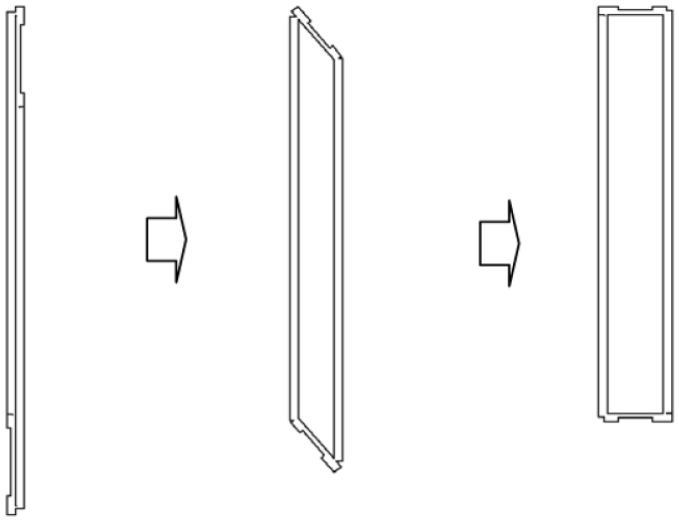

Example: How to put the packing for 60mm width amplifier

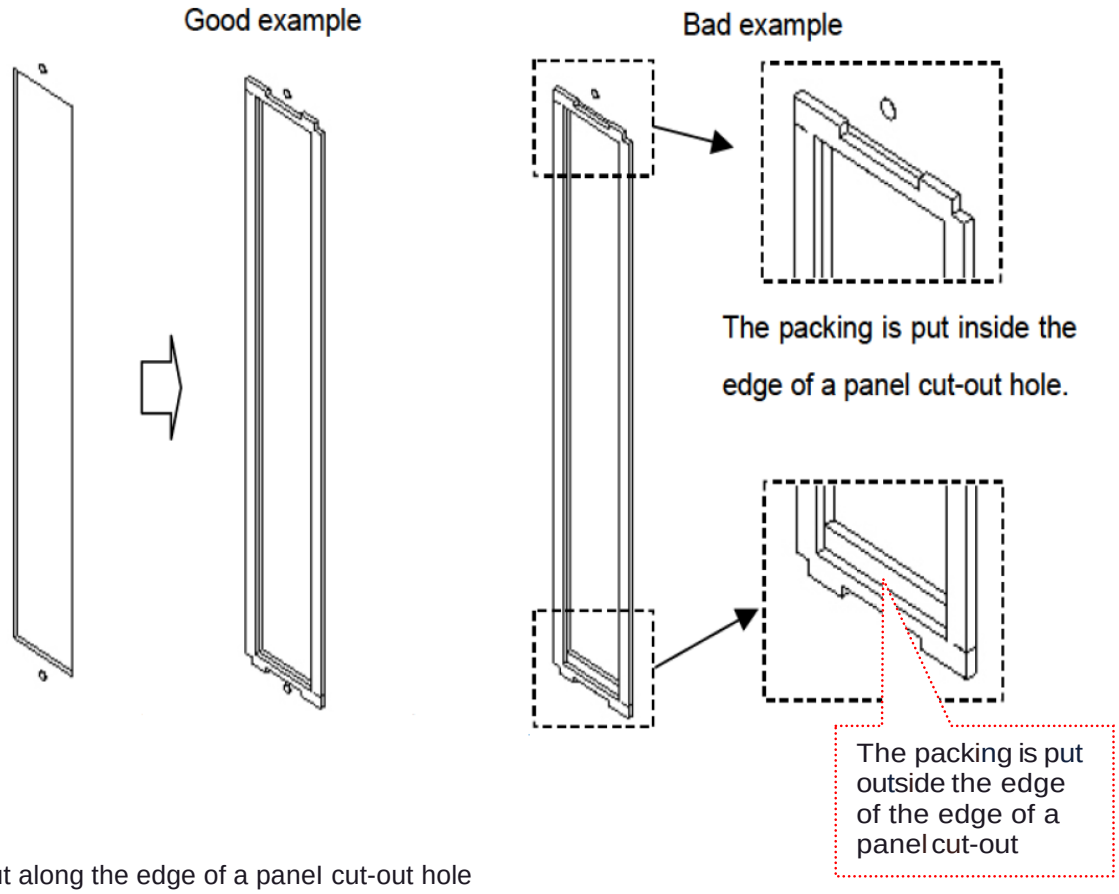

The packing is put along the edge of a panel cut-out hole

Please put the packing so that the distance between the packing and the edge of the panel cut-out hole is <1mm